5. Engine Control Module (ECM) I/O Signal

A: ELECTRICAL SPECIFICATION

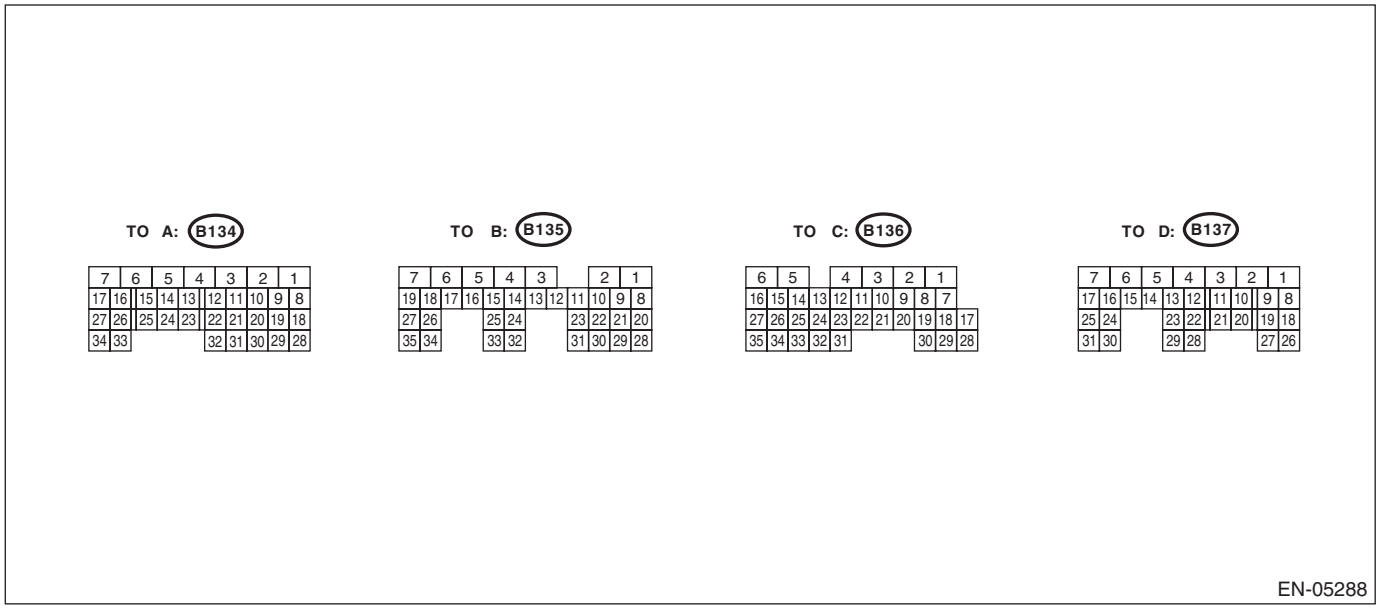

Description		Connector No.	Terminal No.	Signal (V)		Note
				Ignition SW ON (engine OFF)	Engine ON (idling)	
Crankshaft position sensor	Signal (+)	B134	13	0	–7 — +7	Sensor output waveform
	Signal (–)	B134	14	0	0	—
	Shield	B134	24	0	0	—
Rear oxygen sensor	Signal	B135	4	0	0 — 0.9	—
	Shield	B135	1	0	0	—
	GND (sensor)	B134	29	0	0	—
Front oxygen (A/F) sensor heater	Signal 1	B136	3	10 — 13	1 — 14	Waveform
	Signal 2	B136	2	10 — 13	1 — 14	Waveform
Rear oxygen sensor heater signal		B136	4	10 — 13	1 — 14	Waveform
Engine coolant temperature sensor	Signal	B134	34	1.0 — 1.4	1.0 — 1.4	After engine is warmed-up.
	GND (sensor)	B134	29	0	0	After engine is warmed-up.
Vehicle speed signal		B136	12	0 or 5	0 or 5	“5” and “0” are repeatedly displayed when vehicle is driven.
Air flow sensor	Signal	B135	26	—	0.3 — 4.5	—
	Shield	B135	35	0	0	—
	GND	B135	34	0	0	—
Intake air temperature sensor signal		B135	18	0.3 — 4.6	0.3 — 4.6	—
Camshaft position sensor	Signal (+)	B134	12	0	–7 — +7	Sensor output waveform
	Signal (–)	B134	22	0	0	—
	Shield	B134	24	0	0	—
Starter switch		B136	32	0	0	Cranking: 8 — 14
A/C switch		B136	23	ON: 10 — 13 OFF: 0	ON: 12 — 14 OFF: 0	—
Ignition switch		B135	27	10 — 13	12 — 14	—

Engine Control Module (ECM) I/O Signal

Description		Connector No.	Terminal No.	Signal (V)		Note
				Ignition SW ON (engine OFF)	Engine ON (idling)	
Neutral position switch		B136	31	ON: 0 OFF: 10 — 13	ON: 0 OFF: 12 — 14	—
Test mode connector		B135	19	10 — 13	12 — 14	When connected: 0
Knock sensor	Signal	B134	15	2.5	2.5	—
	Shield	B134	25	0	0	—
Back-up power supply		B135	5	10 — 13	12 — 14	Ignition switch “OFF”: 10 — 13
Control module power supply		B134	7	10 — 13	12 — 14	—
		B135	2	10 — 13	12 — 14	—
Ignition control	1	B137	18	0	1 — 3.4	Waveform
	2	B137	19	0	1 — 3.4	Waveform
Fuel injector	#1	B137	8	10 — 13	1 — 14	Waveform
	#2	B137	9	10 — 13	1 — 14	Waveform
	#3	B137	10	10 — 13	1 — 14	Waveform
	#4	B137	11	10 — 13	1 — 14	Waveform
Fuel pump control relay		B136	13	ON: 0.5 or less OFF: 10 — 13	ON: 0.5 or less OFF: 12 — 14	—
A/C relay control		B136	9	ON: 0.5 or less OFF: 10 — 13	ON: 0.5 or less OFF: 12 — 14	—
Radiator fan relay 1 control		B136	18	ON: 0.5 or less OFF: 10 — 13	ON: 0.5 or less OFF: 12 — 14	—
Radiator fan relay 2 control		B136	29	ON: 0.5 or less OFF: 10 — 13	ON: 0.5 or less OFF: 12 — 14	Model with A/C only
Starter relay control		B136	20	ON: 0.5 or less OFF: 10 — 13	ON: 0.5 or less OFF: 12 — 14	—
Self-shut relay control		B136	24	0.5 or less	0.5 or less	—
Malfunction indicator light		B136	11	—	—	Light “ON”: 1 or less Light “OFF”: 10 — 14
Engine speed output		B136	22	—	0 — 13	Waveform
Purge control solenoid valve		B137	29	ON: 1 or less OFF: 10 — 13	ON: 1 or less OFF: 12 — 14	Sensor output waveform
Manifold absolute pressure sensor	Signal	B134	6	3.4 — 3.8	1.4 — 1.8	—
	GND (sensor)	B134	29	0	0	
Fuel tank pressure sensor	Signal	B135	32	2.3 — 2.7	2.3 — 2.7	When the fuel filler cap is reinstalled after removing it, the valve will operate.
	GND (sensor)	B135	30	0	0	—
Pressure control solenoid valve		B136	28	ON: 1 or less OFF: 10 — 13	ON: 1 or less OFF: 12 — 14	—
Drain valve		B136	17	ON: 1 or less OFF: 10 — 13	ON: 1 or less OFF: 12 — 14	—
Fuel level sensor		B135	10	0.3 — 4.5	0.3 — 4.5	—
Fuel temperature sensor signal		B135	17	1 — 4	1 — 4	—
Small light switch		B135	15	ON: 0 OFF: 10 — 13	ON: 0 OFF: 12 — 14	—
Blower fan switch		B135	16	ON: 0 OFF: 10 — 13	ON: 0 OFF: 12 — 14	—
Rear defogger switch		B135	14	ON: 0 OFF: 10 — 13	ON: 0 OFF: 12 — 14	—

Description		Connector No.	Terminal No.	Signal (V)		Note
				Ignition SW ON (engine OFF)	Engine ON (idling)	
Power steering oil pressure switch		B134	33	ON: 1 or less OFF: 10 — 13	ON: 0.5 or less OFF: 12 — 14	—
Front oxygen (A/F) sensor signal (+)		B135	9	—	2.7 — 2.9	—
Front oxygen (A/F) sensor signal (–)		B135	8	—	2.35 — 2.55	—
Front oxygen (A/F) sensor shield		B135	1	0	0	—
SSM/GST communication line		B136	16	1 or less ←→ 4 or more	1 or less ←→ 4 or more	—
Ground	Engine 1	B134	5	0	0	—
	Engine 2	B137	7	0	0	—
	Engine 3	B137	2	0	0	—
	Engine 4	B137	1	0	0	—
	Engine 5	B137	3	0	0	—
	Ignition 1	B137	26	0	0	—
	Ignition 2	B137	6	0	0	—
	Body	B136	6	0	0	—
Electronic throttle control	Main	B134	18	0.64 — 0.72 Fully opened: 3.96	0.64 — 0.72 (After engine is warmed-up.)	Fully closed: 0.6 Fully opened: 3.96
	Sub	B134	28	1.51 — 1.58 Fully opened: 4.17	1.51 — 1.58 (after engine is warmed-up.)	Fully closed: 1.48 Fully opened: 4.17
	Power supply	B134	19	5	5	—
	GND (sensor)	B134	29	0	0	—
Electronic throttle control motor (+)		B137	5	Duty waveform	Duty waveform	Drive frequency: 500 Hz
Electronic throttle control motor (–)		B137	4	Duty waveform	Duty waveform	Drive frequency: 500 Hz
Electronic throttle control motor power supply		B136	1	10 — 13	12 — 14	—
Electronic throttle control motor relay		B136	21	ON: 0 OFF: 10 — 13	ON: 0 OFF: 12 — 14	When ignition switch is turned to ON: ON
Accelerator pedal position sensor	Main sensor signal	B135	23	Fully closed: 0.7 Fully opened: 3.0	Fully closed: 0.7 Fully opened: 3.0	—
	Main power supply	B135	21	5	5	—
	GND (Main sensor)	B135	29	0	0	—
	Sub sensor signal	B135	31	Fully closed: 0.7 Fully opened: 3.0	Fully closed: 0.7 Fully opened: 3.0	—
	Sub power supply	B135	22	5	5	—
	GND (Sub sensor)	B135	30	0	0	—
Cruise control set light		B135	3	ON: 0 OFF: 10 — 13	ON: 0 OFF: 12 — 14	—
Main light		B135	6	ON: 0 OFF: 10 — 13	ON: 0 OFF: 12 — 14	—

Description		Connector No.	Terminal No.	Signal (V)		Note
				Ignition SW ON (engine OFF)	Engine ON (idling)	
Clutch switch		B136	25	When clutch pedal is depressed: 0 When brake pedal is released: 10 — 13	When clutch pedal is depressed: 0 When brake pedal is released: 12 — 14	—
SET/COAST switch		B135	24	ON: 10 — 13 OFF: 0	ON: 12 — 14 OFF: 0	—
Brake switch 1		B135	20	When brake pedal is depressed: 0 When brake pedal is released: 10 — 13	When brake pedal is depressed: 0 When brake pedal is released: 12 — 14	—
Brake switch 2		B135	28	When brake pedal is depressed: 10 — 13 When brake pedal is released: 0	When brake pedal is depressed: 12 — 14 When brake pedal is released: 0	—
RESUME/ACC switch		B135	13	ON: 10 — 13 OFF: 0	ON: 12 — 14 OFF: 0	—
Main switch		B135	12	ON: 10 — 13 OFF: 0	ON: 12 — 14 OFF: 0	—
CAN communication	Signal (+)	B136	27	Pulse signal		—
	Signal (–)	B136	35	Pulse signal		—
EGR solenoid valve	Signal 1	B134	8	0 or 10 — 13	0 or 12 — 14	—
	Signal 2	B134	9	0 or 10 — 13	0 or 12 — 14	—
	Signal 3	B134	10	0 or 10 — 13	0 or 12 — 14	—
	Signal 4	B134	20	0 or 10 — 13	0 or 12 — 14	—
Oil switching solenoid valve RH	Signal (+)	B137	25	0	Duty waveform	Drive frequency: 300 Hz
	Signal (–)	B137	24	0	0	—
Oil switching solenoid valve LH	Signal (+)	B137	31	0	Duty waveform	Drive frequency: 300 Hz
	Signal (–)	B137	30	0	0	—
Oil temperature sensor signal		B134	23	1.0 — 1.4	1.0 — 1.4	After engine is warmed-up.
Variable valve lift diagnosis oil pressure switch RH		B134	31	0	0	—
Variable valve lift diagnosis oil pressure switch LH		B134	32	0	0	—
PCV diagnosis connector		B134	30	0	0	—

Input/output name	Measuring condition	Waveform
1. Crankshaft position sensor	During idling	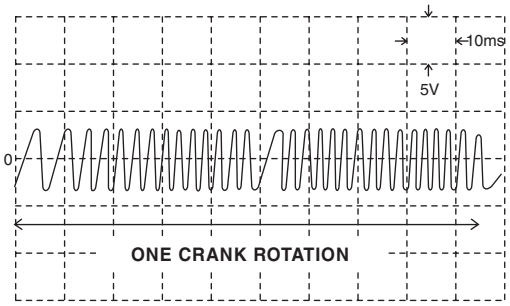 EN-05322
2. Camshaft position sensor	During idling	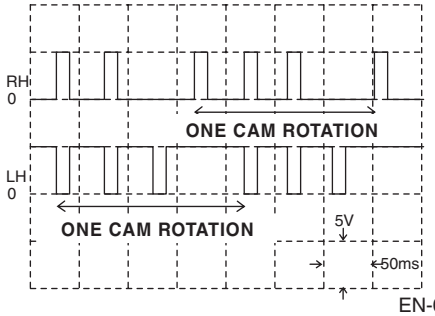 EN-05359

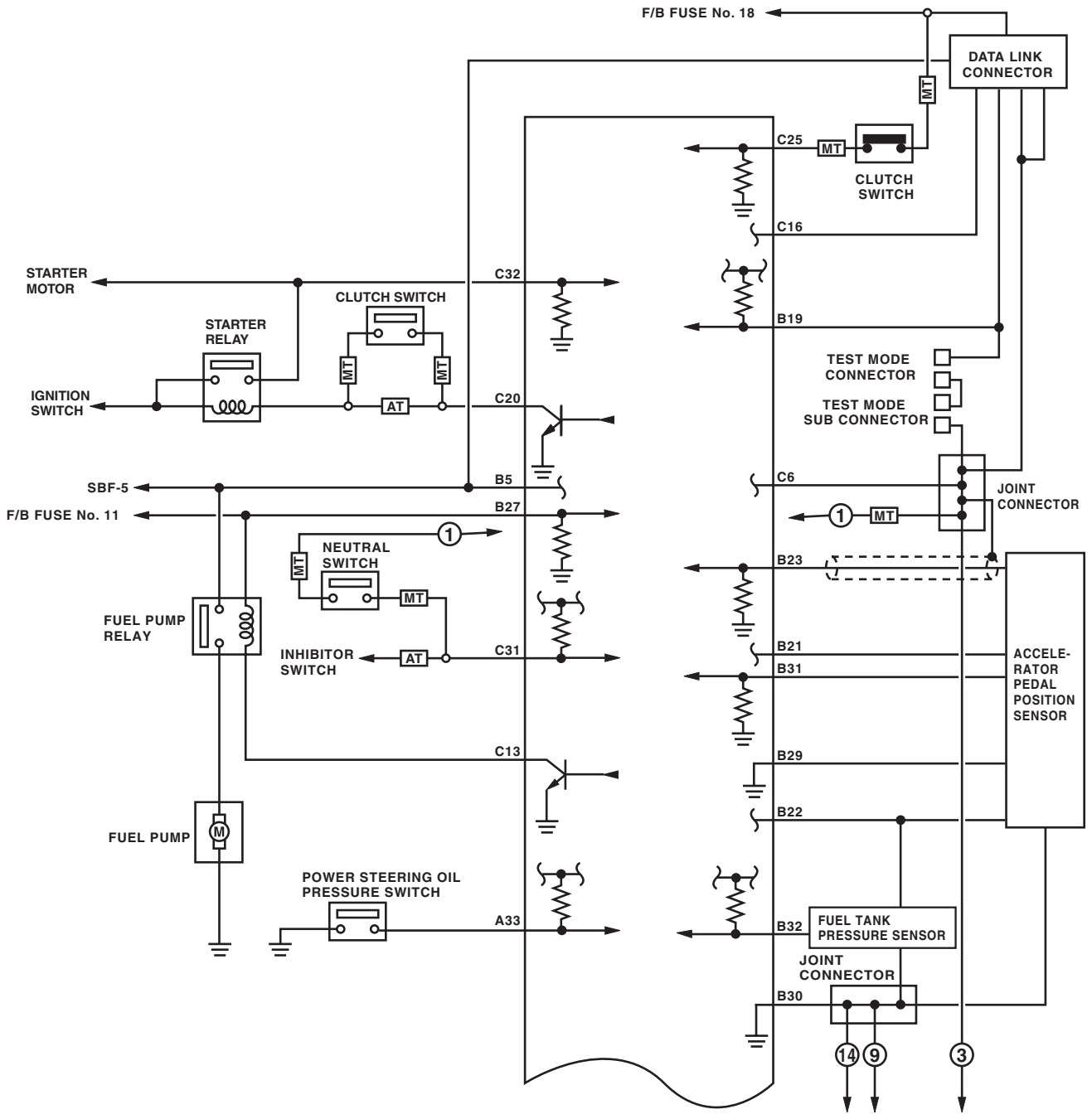
F/B FUSE No. 18
DATA LINK CONNECTOR
MT
C25
MT
CLUTCH SWITCH
C16
STARTER MOTOR
C32
CLUTCH SWITCH
STARTER RELAY
B19
MT
MT
TEST MODE CONNECTOR
IGNITION SWITCH
AT
C20
TEST MODE SUB CONNECTOR
SBF-5
B5
C6
JOINT CONNECTOR
F/B FUSE No. 11
B27
1
MT
1
NEUTRAL SWITCH
MT
B23
MT
FUEL PUMP RELAY
INHIBITOR SWITCH
AT
C31
B21
B31
ACCELE-RATOR PEDAL POSITION SENSOR
C13
B29
B22
FUEL PUMP
M
POWER STEERING OIL PRESSURE SWITCH
A33
B32
FUEL TANK PRESSURE SENSOR
JOINT CONNECTOR
B30
14
9
3

EN-05380

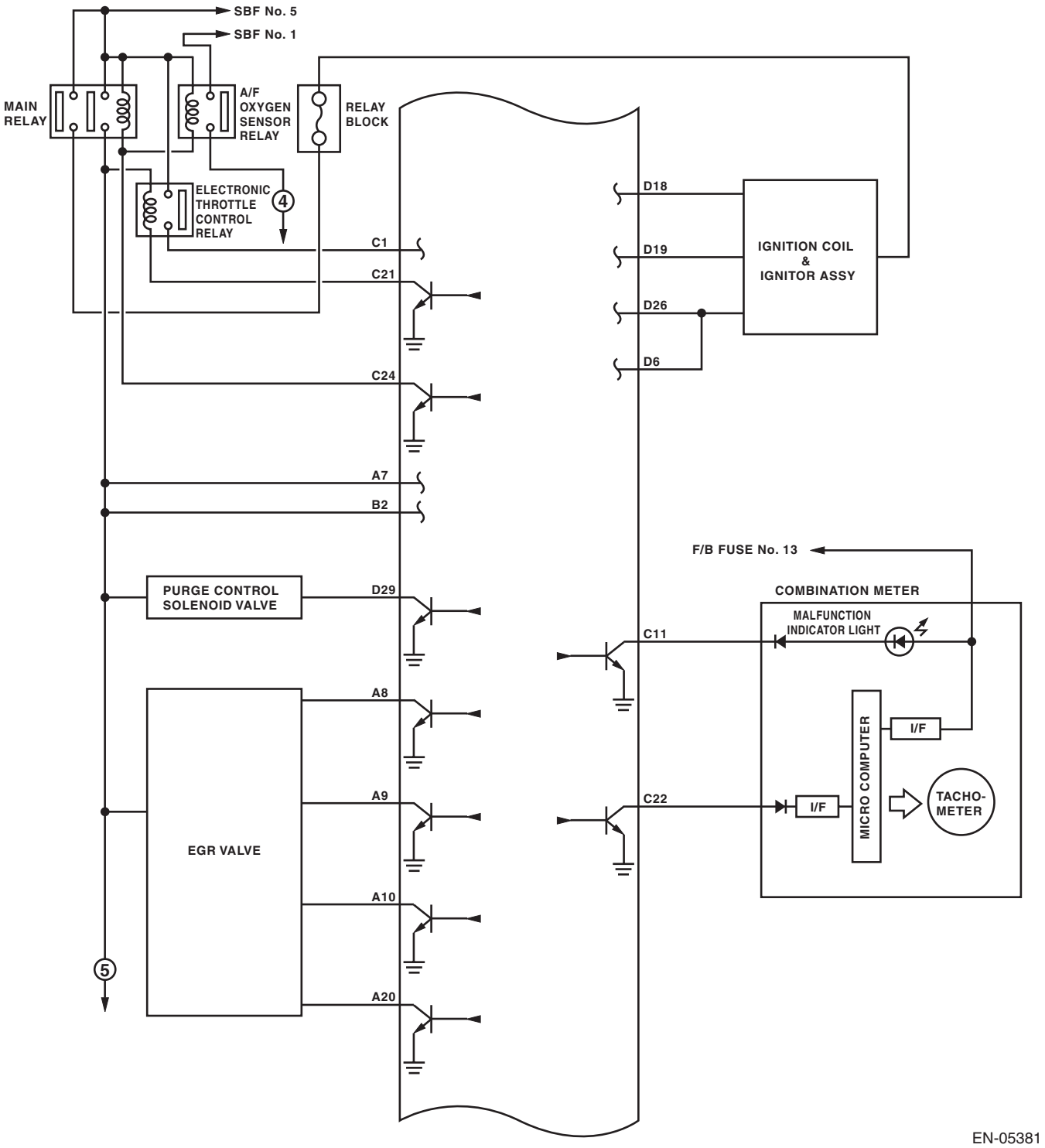
SBF No. 5
SBF No. 1
MAIN RELAY
A/F OXYGEN SENSOR RELAY
RELAY BLOCK
ELECTRONIC THROTTLE CONTROL RELAY
4
C1
C21
C24
A7
B2
D18
D19
D26
D6
IGNITION COIL & IGNITOR ASSY
F/B FUSE No. 13
COMBINATION METER
MALFUNCTION INDICATOR LIGHT
PURGE CONTROL SOLENOID VALVE
D29
C11
A8
A9
C22
EGR VALVE
A10
A20
5
I/F
MICRO COMPUTER
TACHO-METER
EN-05381

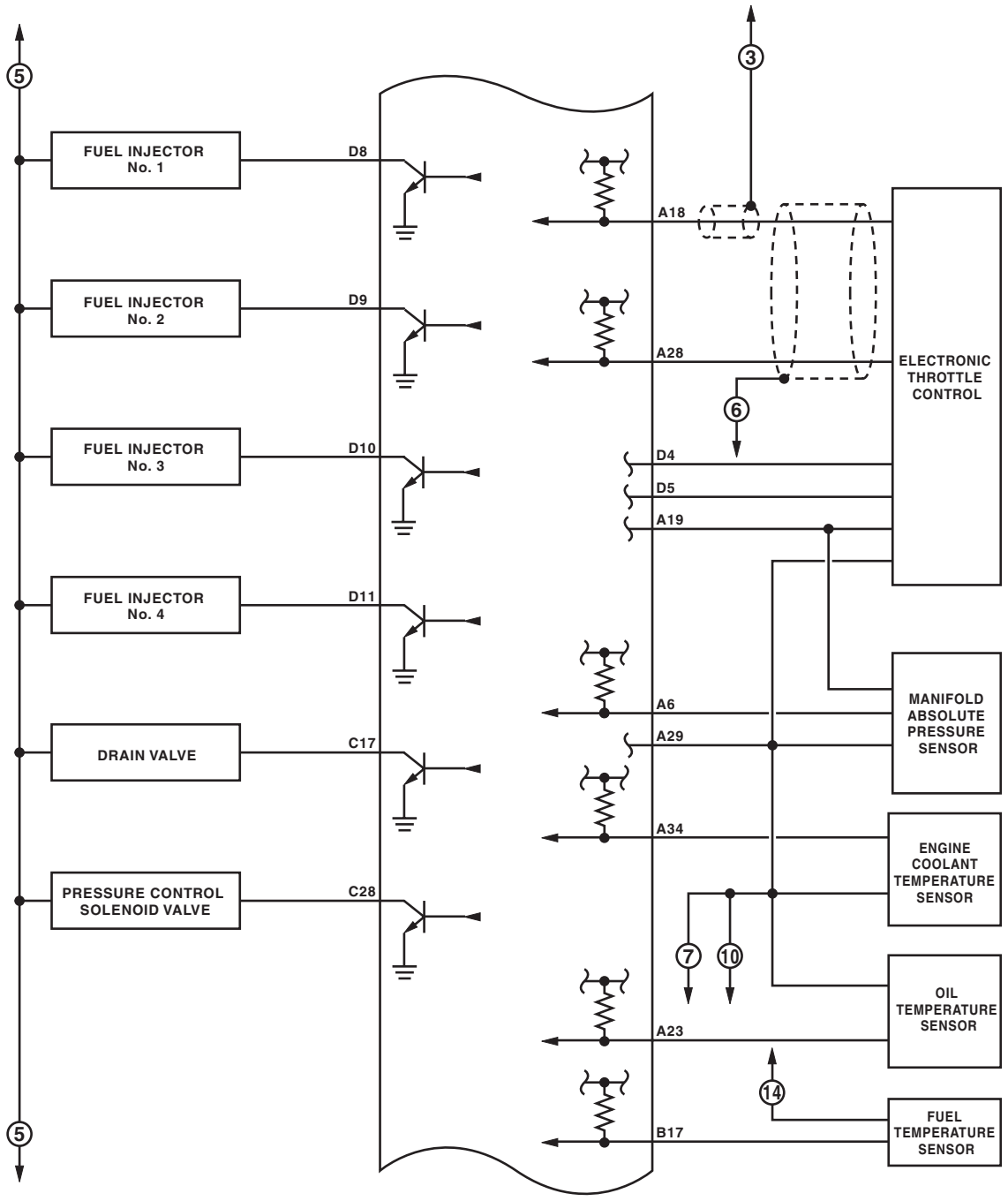
5
FUEL INJECTOR No. 1
D8
FUEL INJECTOR No. 2
D9
FUEL INJECTOR No. 3
D10
FUEL INJECTOR No. 4
D11
DRAIN VALVE
C17
PRESSURE CONTROL SOLENOID VALVE
C28
5
3
A18
A28
6
D4
D5
A19
ELECTRONIC THROTTLE CONTROL
A6
A29
MANIFOLD ABSOLUTE PRESSURE SENSOR
A34
ENGINE COOLANT TEMPERATURE SENSOR
7
10
A23
OIL TEMPERATURE SENSOR
14
B17
FUEL TEMPERATURE SENSOR

EN-05382

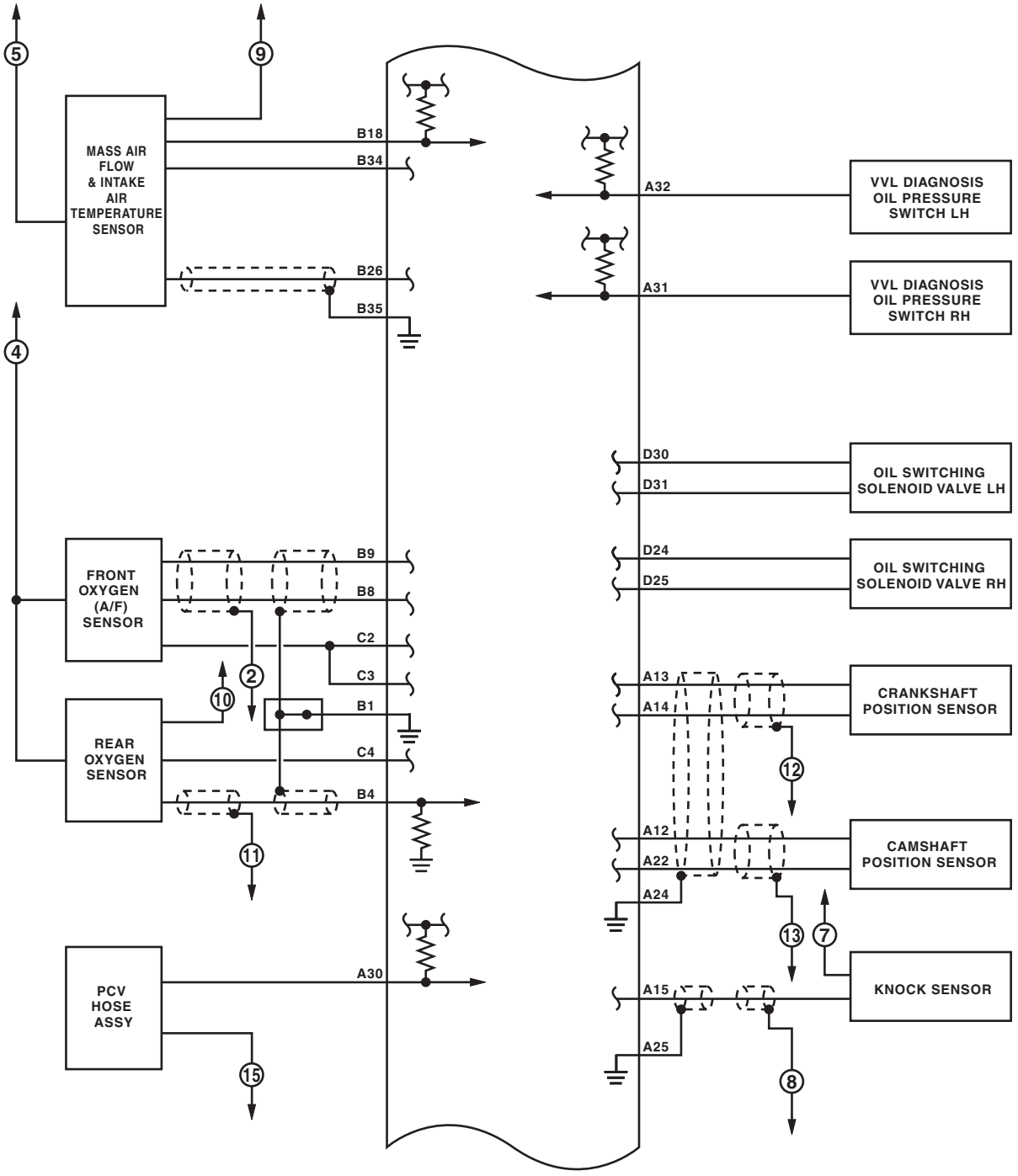
MASS AIR FLOW & INTAKE AIR TEMPERATURE SENSOR
B18
B34
B26
B35
VVL DIAGNOSIS OIL PRESSURE SWITCH LH
A32
VVL DIAGNOSIS OIL PRESSURE SWITCH RH
A31
D30
D31
OIL SWITCHING SOLENOID VALVE LH
D24
D25
OIL SWITCHING SOLENOID VALVE RH
FRONT OXYGEN (A/F) SENSOR
B9
B8
C2
C3
B1
REAR OXYGEN SENSOR
C4
B4
A13
A14
CRANKSHAFT POSITION SENSOR
A12
A22
A24
CAMSHAFT POSITION SENSOR
PCV HOSE ASSY
A30
A15
A25
KNOCK SENSOR
5
9
4
2
10
11
12
13
7
8
15

EN-05383

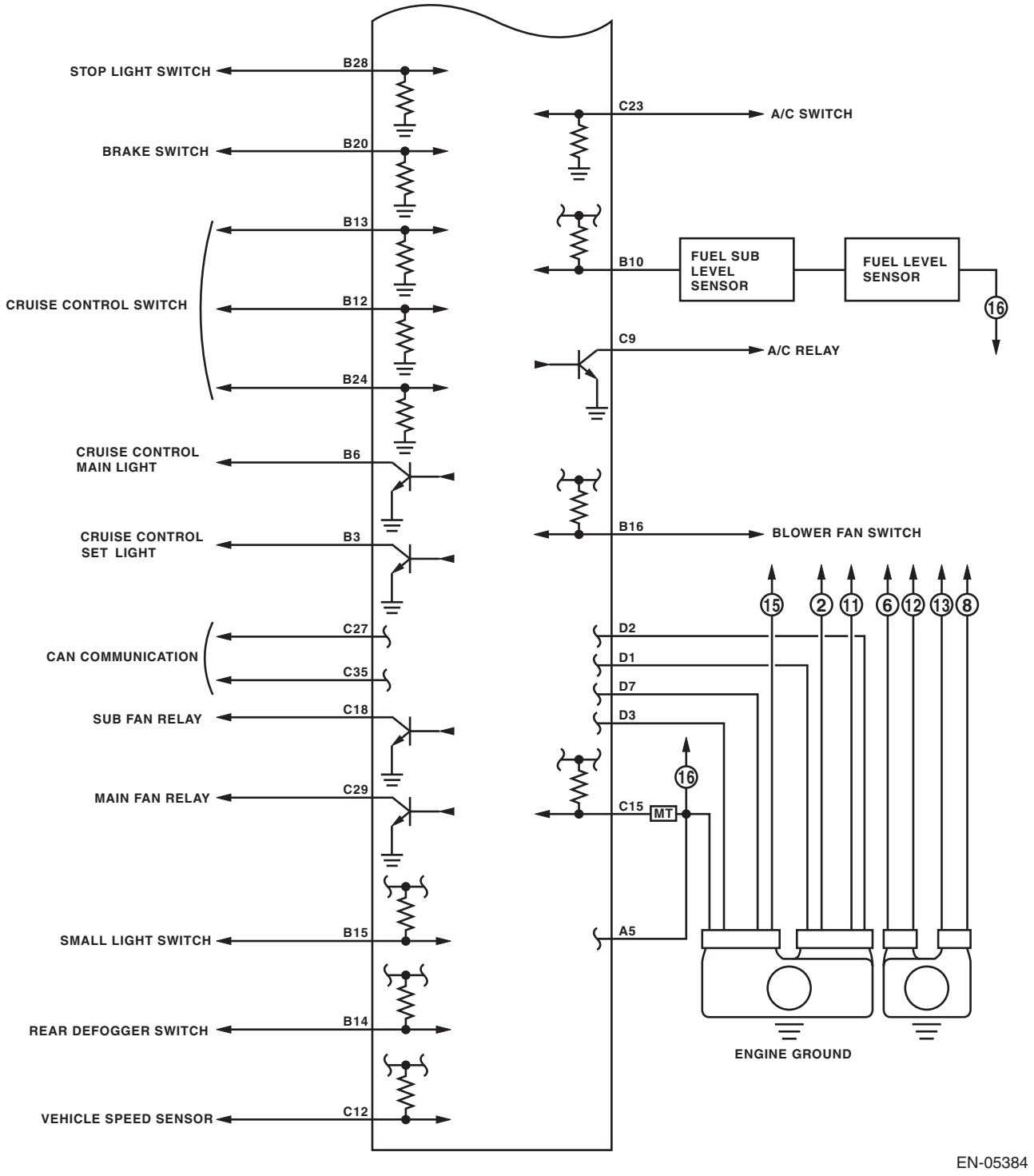
STOP LIGHT SWITCH
B28
BRAKE SWITCH
B20
B13
CRUISE CONTROL SWITCH
B12
B24
CRUISE CONTROL MAIN LIGHT
B6
CRUISE CONTROL SET LIGHT
B3
C27
CAN COMMUNICATION
C35
SUB FAN RELAY
C18
MAIN FAN RELAY
C29
SMALL LIGHT SWITCH
B15
REAR DEFOGGER SWITCH
B14
VEHICLE SPEED SENSOR
C12
C23
A/C SWITCH
B10
FUEL SUB LEVEL SENSOR
FUEL LEVEL SENSOR
16
C9
A/C RELAY
B16
BLOWER FAN SWITCH
15
2
11
6
12
13
8
D2
D1
D7
D3
16
C15
MT
A5
ENGINE GROUND

EN-05384